BELONG TOOLS®

Monitor Arm - KU4M series

Installation Instructions

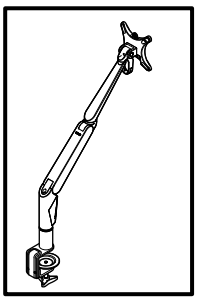

Parts List

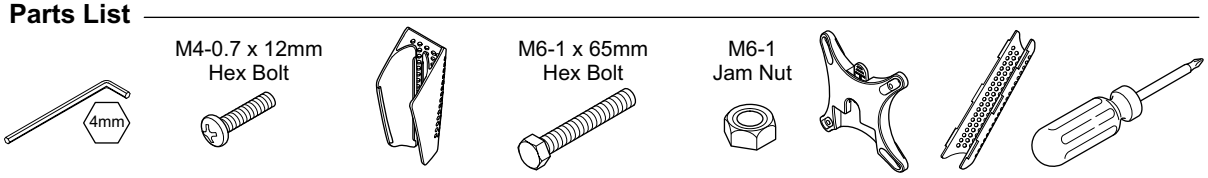

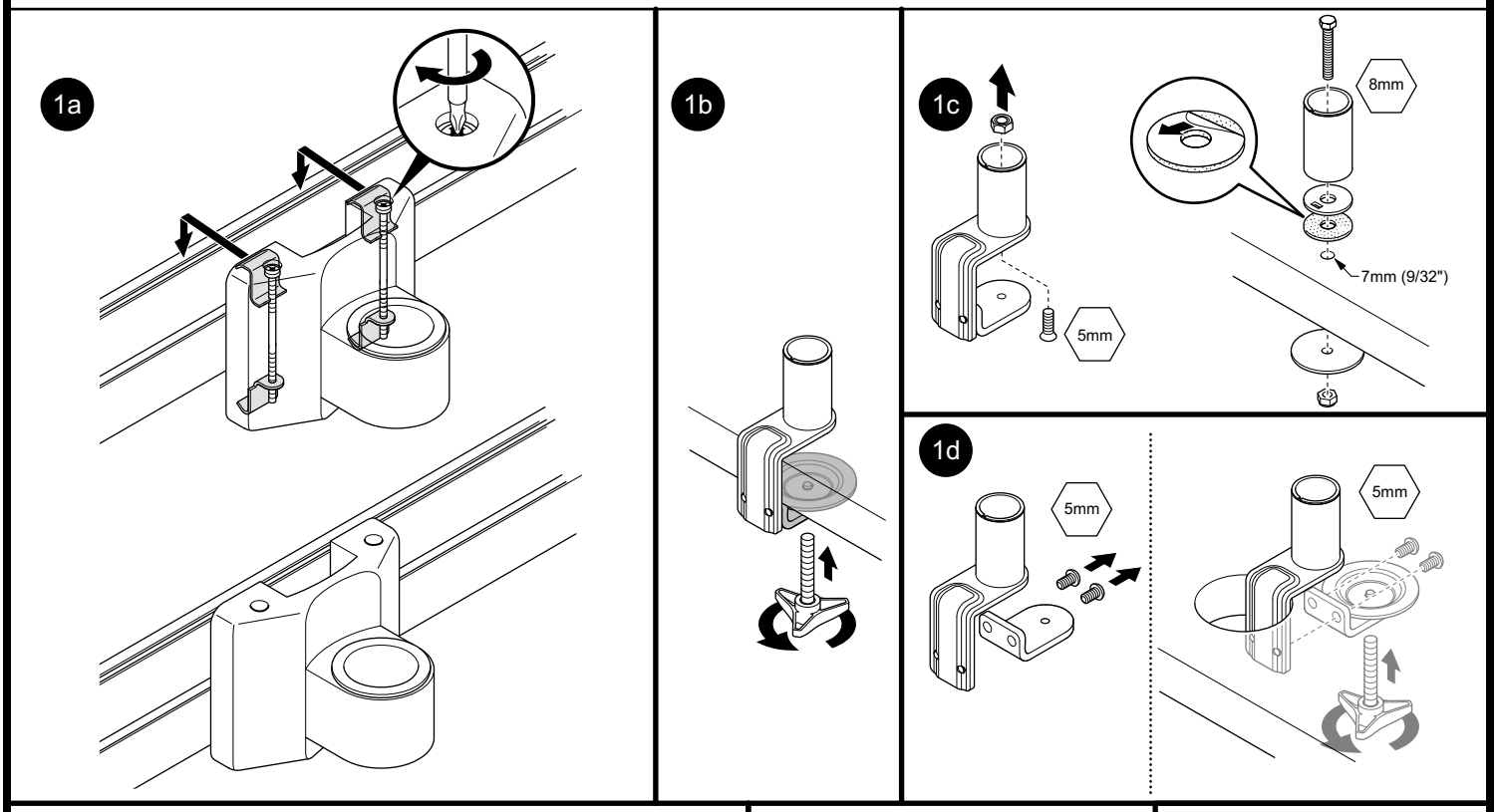

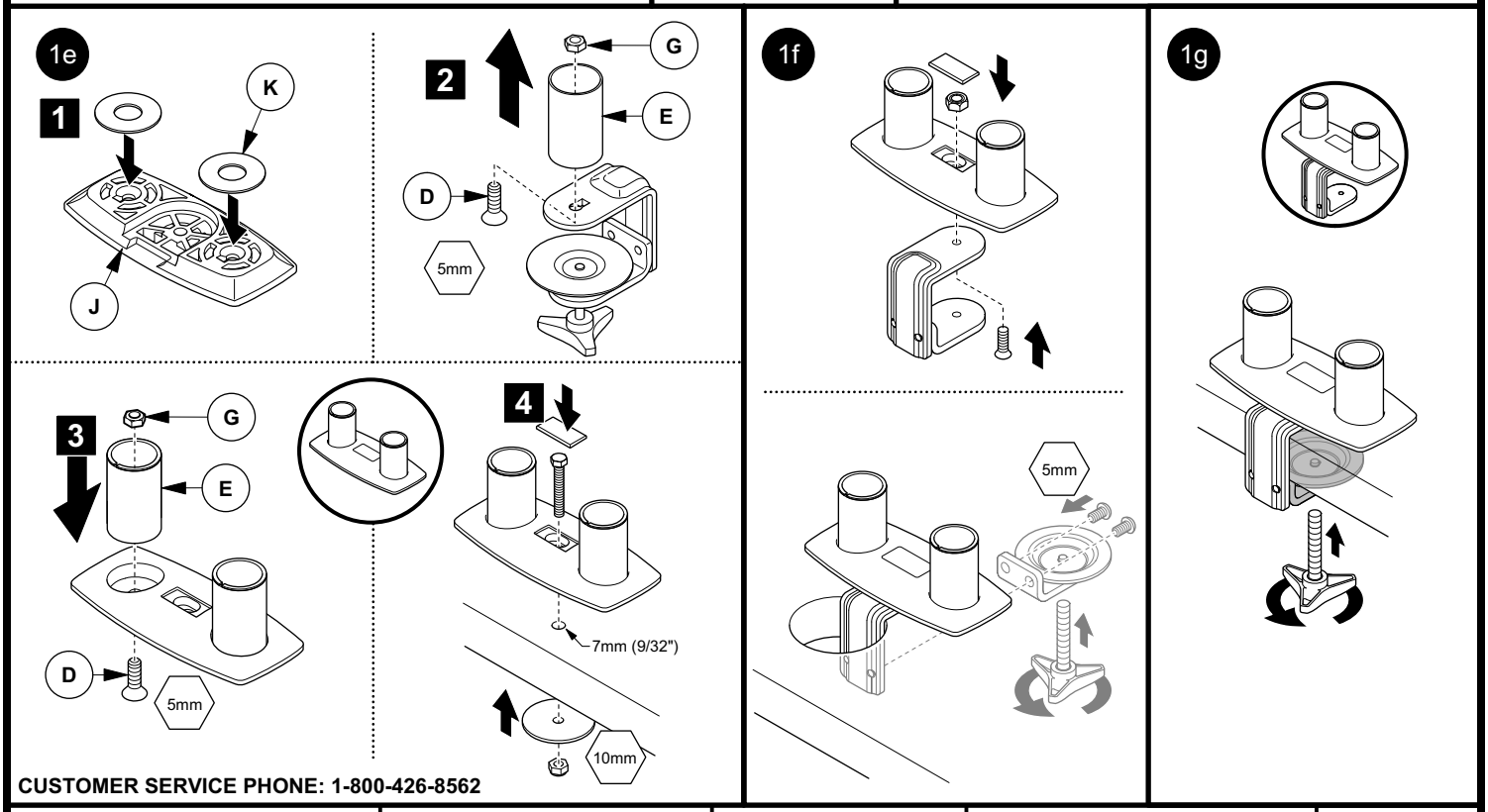

CUSTOMER SERVICE PHONE: 1-800-426-8562

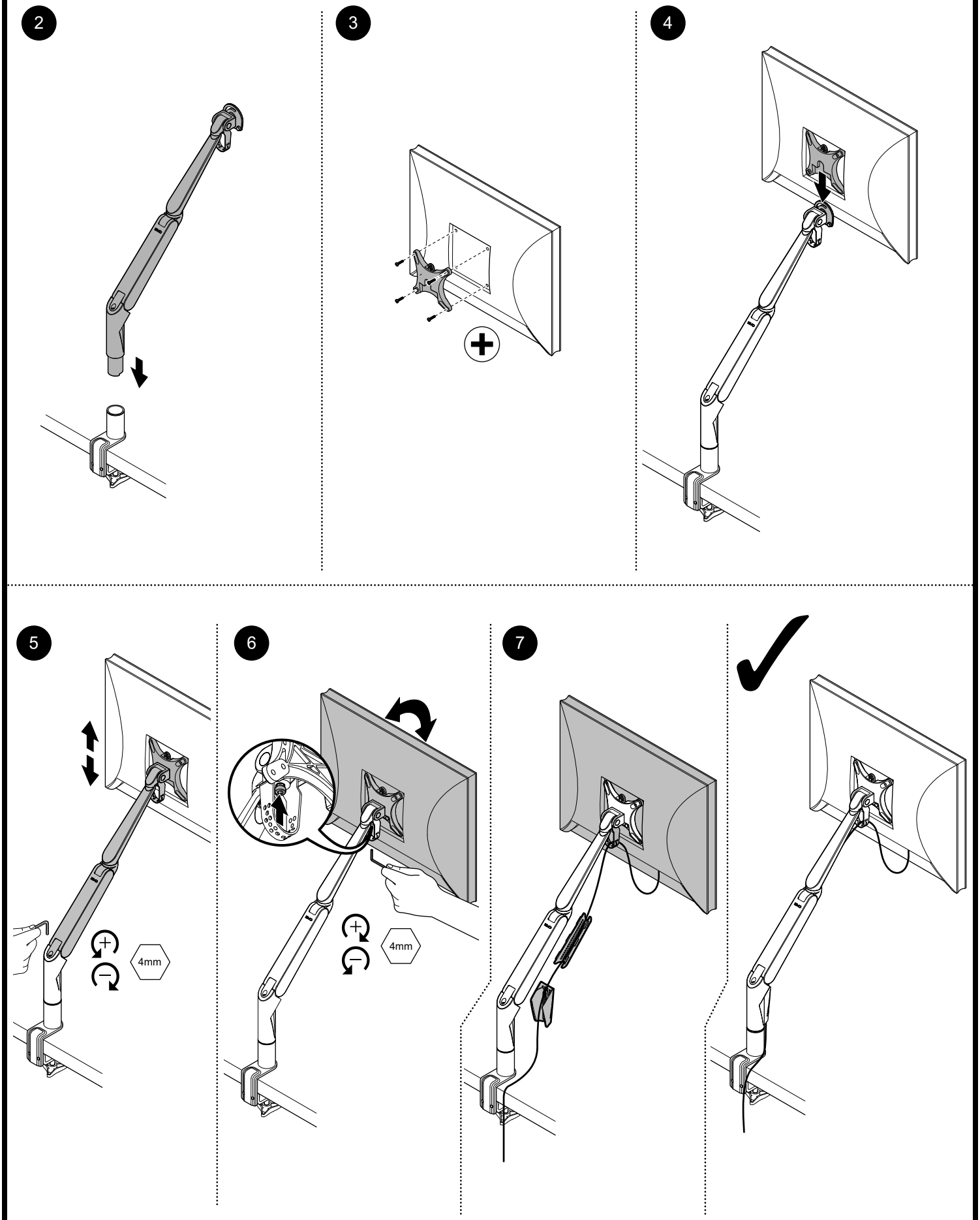

CUSTOMER SERVICE PHONE: 1-800-426-8562

HAWORTH®	E.C.O. No: 251-203	Page: 2 of 2	Part No: 7029-9804	Rev: D